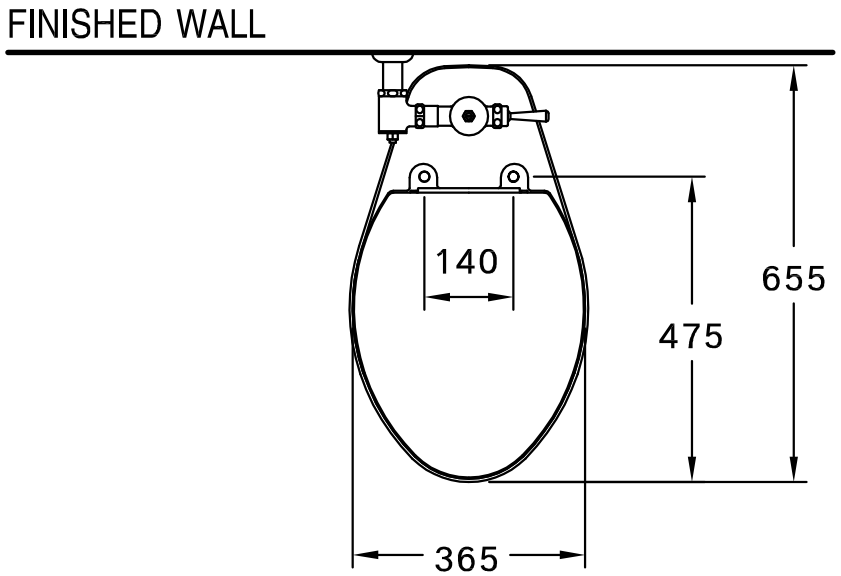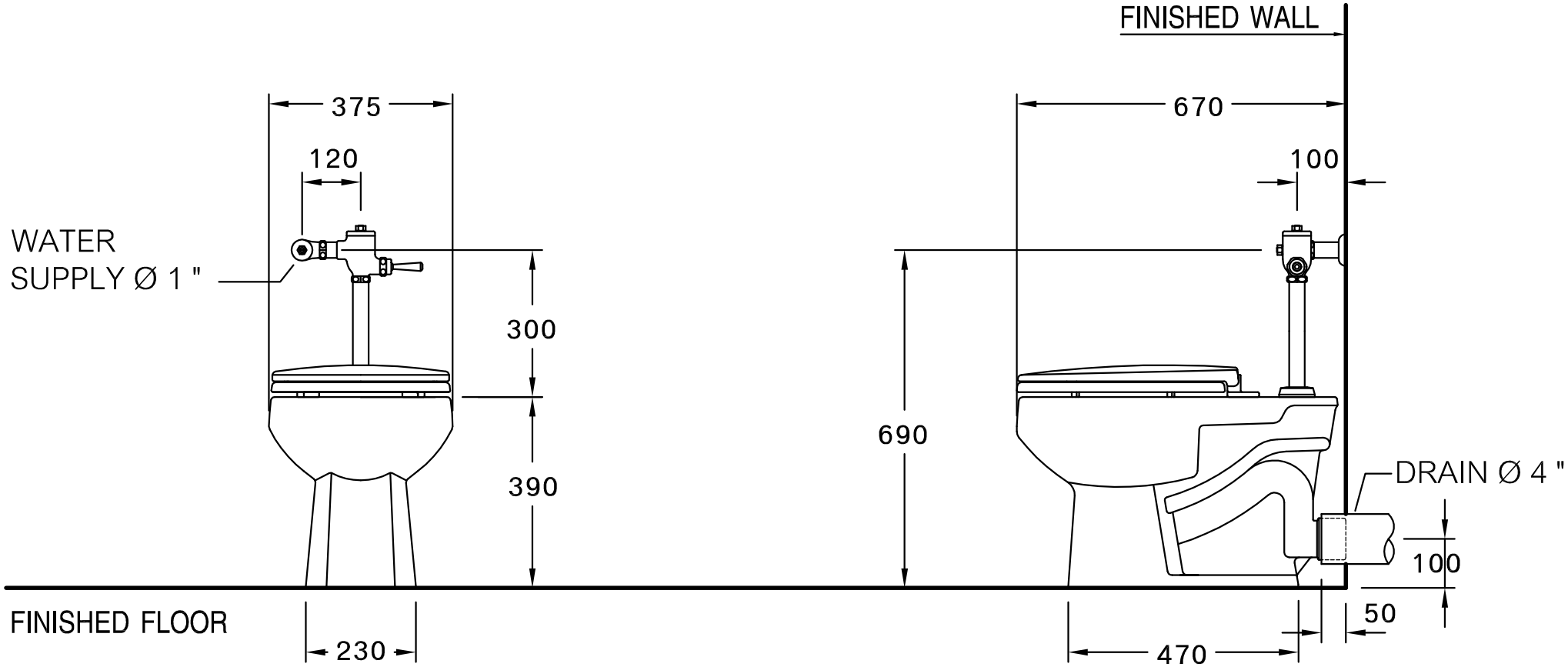| DRAWING FOR CATALOG | |
|---|---|
| NAME | Elzra ( P ) FV 3.8 Lpf. |
| CODE | C-13921 |
| DATE | 25/02/57 |